PROJECT NUMBER: RF100177
Vijay Singh, PhD
Sky Acres Farm, 1680 Black River Road, Far Hills NJ 07931 USA
vsingh@art-engineers.com
May 26 2010

Title: Wireless Vineyard Monitor

Abstract

Development of battery powered environmental monitors based on the Propeller and Parallax 27982 RF transceiver. Monitors can be placed in strategic areas in the vineyard for monitoring the microclimate. Sensors measure soil temperature, soil moisture, air temperature, humidity, and sunlight. A built-in valve interface allows for automatic irrigation control based on soil humidity Data is transmitted to a host PC for logging. Minimum and maximum readings as well as cumulative sunlight are computed on 24 hour basis. The monitor can be used to predict local frost damage, and alarm workers to take measures to save crops. The device can also be used for monitoring a garden or farm. A low power design allows long operation using inexpensive alkaline batteries.

Microclimate date is very useful for maintaining soil moisture, while minimizing water usage for irrigation. It also is helpful in determining the optimum harvest point for wine production, as well as preventing frost and fungal damage. It is also useful in determining optimum conditions for various pests so that control measures can be taken early.

Features

- Measures soil moisture and temperature
- Measures air temperature and humidity
- Measures solar irradiance
- Can operate irrigation valve for demand-based watering
- Transmits data via RF to logging PC at user-selected interval
- Weatherproof enclosure
- Portable. One piece device
- Long battery life with remote battery life monitor

Project Description

The *Vineyard Monitor* is shown below. It consists of a weatherproof box that houses the electronics mounted on a PVC support pipe. The pipe is intended to be driven into the ground. The soil temperature is measured by a sensor located at the bottom of the pipe. The soil moisture sensor is located on an extension cable so that it can be placed anywhere within a few feet of the monitor. Air temperature and humidity sensors are located midway up the pipe with drilled holes to permit air exchange, and the solar radiation sensor is located on top of the electronics box. The whole unit is very compact and can be moved or placed anywhere without the need for any wiring. Power is provided by 6 x AA batteries or 9V battery. Data is sent wirelessly to a host PC located up to 100 feet away.

The core of the device is a Parallax propeller chip. This handles all the data acquisition and communication needs.

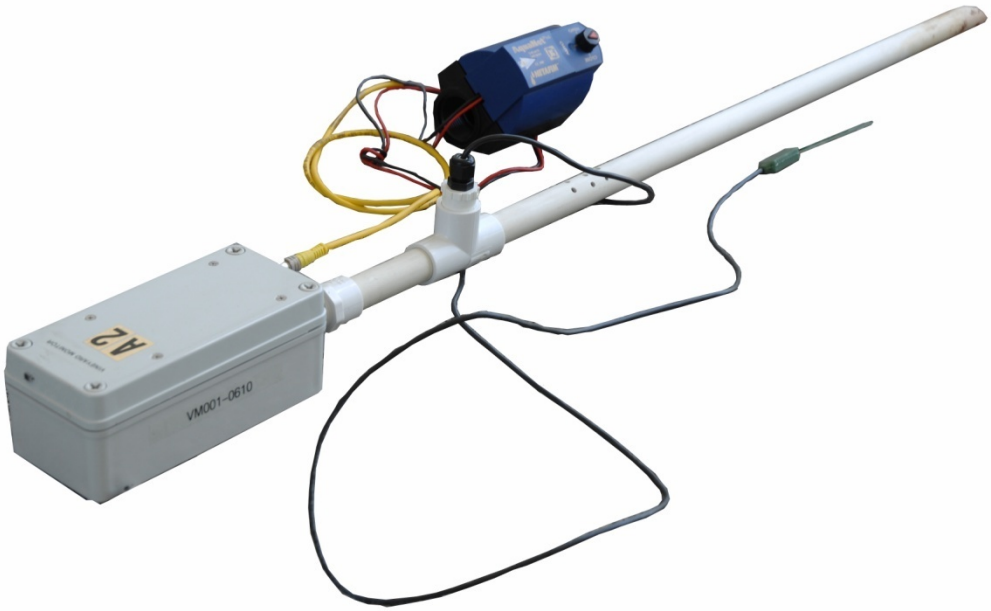

1 Vineyard Monitor

Block Diagram - Monitor

The basic operation of the *Vineyard Monitor* is shown in the black diagram below:

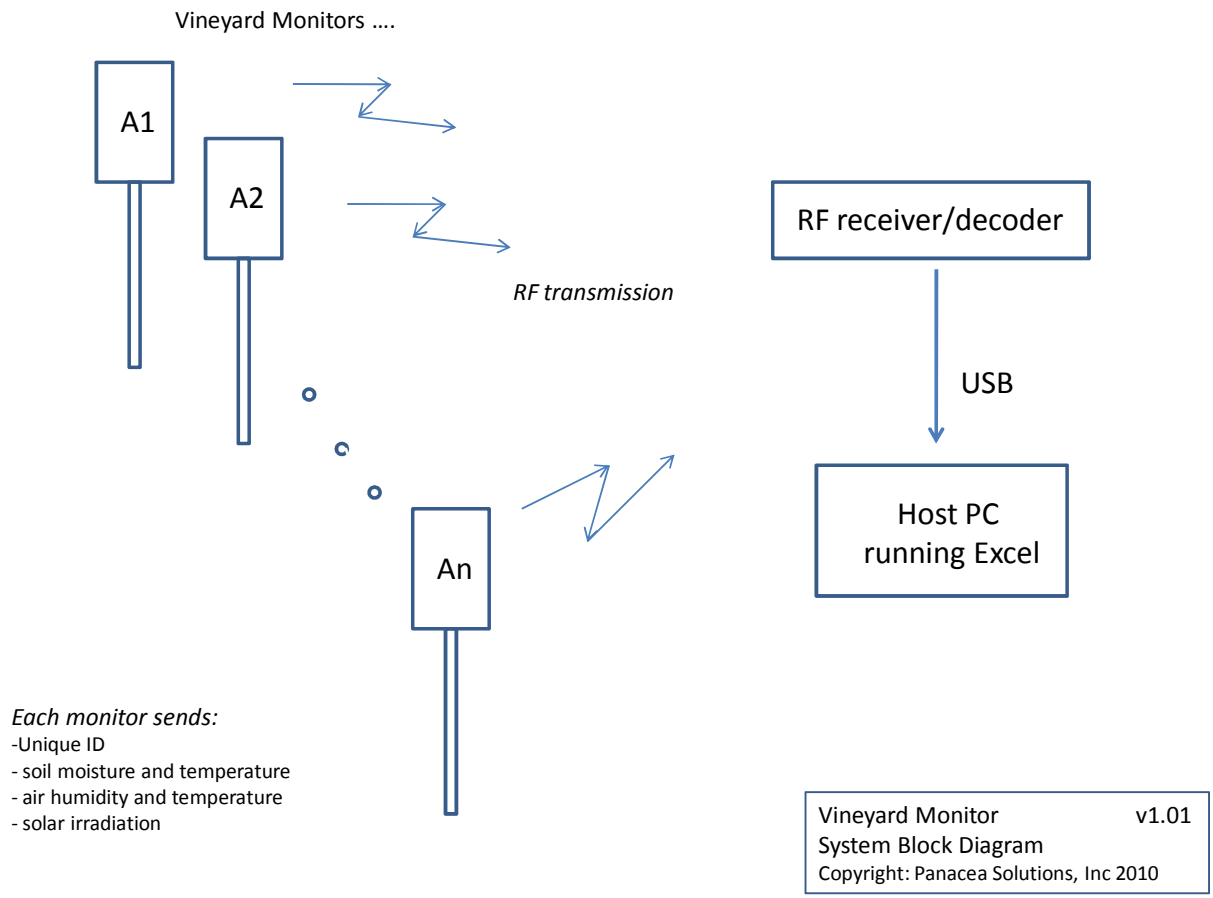

The core of each *Vineyard Monitor* is a PropModule 1x1 . This tiny board contains a Parallax propeller along with essential peripherals. This allows for a very compact design suitable for thru-hole PCB design without the need for surface mount soldering. A Parallax PropPlug can be directly connected to the PropModule for easy programming and debugging over USB.

It was a critical requirement that the device consume as little power as possible in order to maximize battery life. Power consumption is minimized by putting the device into “sleep” mode between data transmissions. This was accomplished by slowing the propeller to 20 kHz during idle, and then switching it to 80 MHz during data acquisition and transmission. Transmitting every 5 or 10 minutes is usually satisfactory, and the device is only on for a few seconds during each transmission. Power is provided by two MAX639 high efficiency DC-DC converters. One converter is always on and provides 3.3V to the propeller chip. When the propeller is inactive, it consumes very little power and the low quiescent

current of the MAX639 brings the idle power draw down to about 0.15mA. The second MAX639 provides 5V power to the sensors and RF transceiver. It is controlled by the propeller using its SHDN line and does not consume any power in the idle state. Maximum voltage rating for the MAX639 is 11.5 volts so the use of a 9 volt battery is ideal.

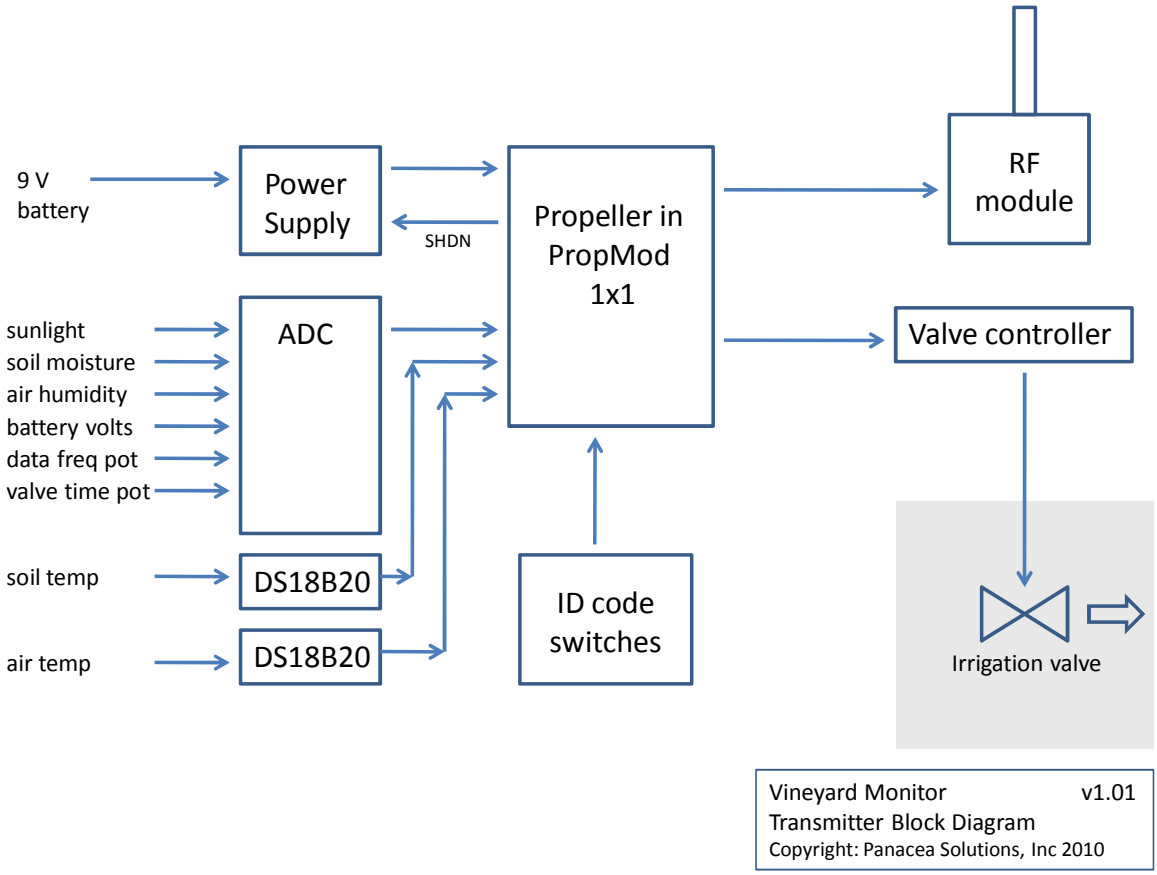

Data transmission to the host PC is done using the Parallax RF433 transceiver. For reliability and minimal power consumption the RF433 is only used for transmission. The *Vineyard Monitor* does not listen to any host commands. Instead it simply transmits data at a set interval. The green LED on the PCB lights up during data transmission. It is an easy matter for the host to determine if the sensor is operating correctly by analyzing the data received and the frequency of transmission. Software to drive the RF433 including polynomial CRC was obtained from the Parallax propeller exchange (CRC_polynomial_oneshot). Each transmission is repeated several times to insure messages get through and to avoid collisions. The host PC checks that data is received from each enabled monitor within a set timeout period, otherwise it alerts the user that a particular monitor has failed.

Since each *Vineyard Monitor* will send data to a common host PC, each monitor must be set up with a unique ID. The ID consists of a group A to F and a subID number 0 to 15. This allows for 254 unique monitors on a single network. Each message contains with the ID so that the host can identify the

source. The group and subID can be set by a set of two rotary switches. This allows the ID to be set in the field without the need for reprogramming.

A microchip MCP3208 8-channel ADC is used for data acquisition. This chip handles the various analog inputs shown in the block diagram.

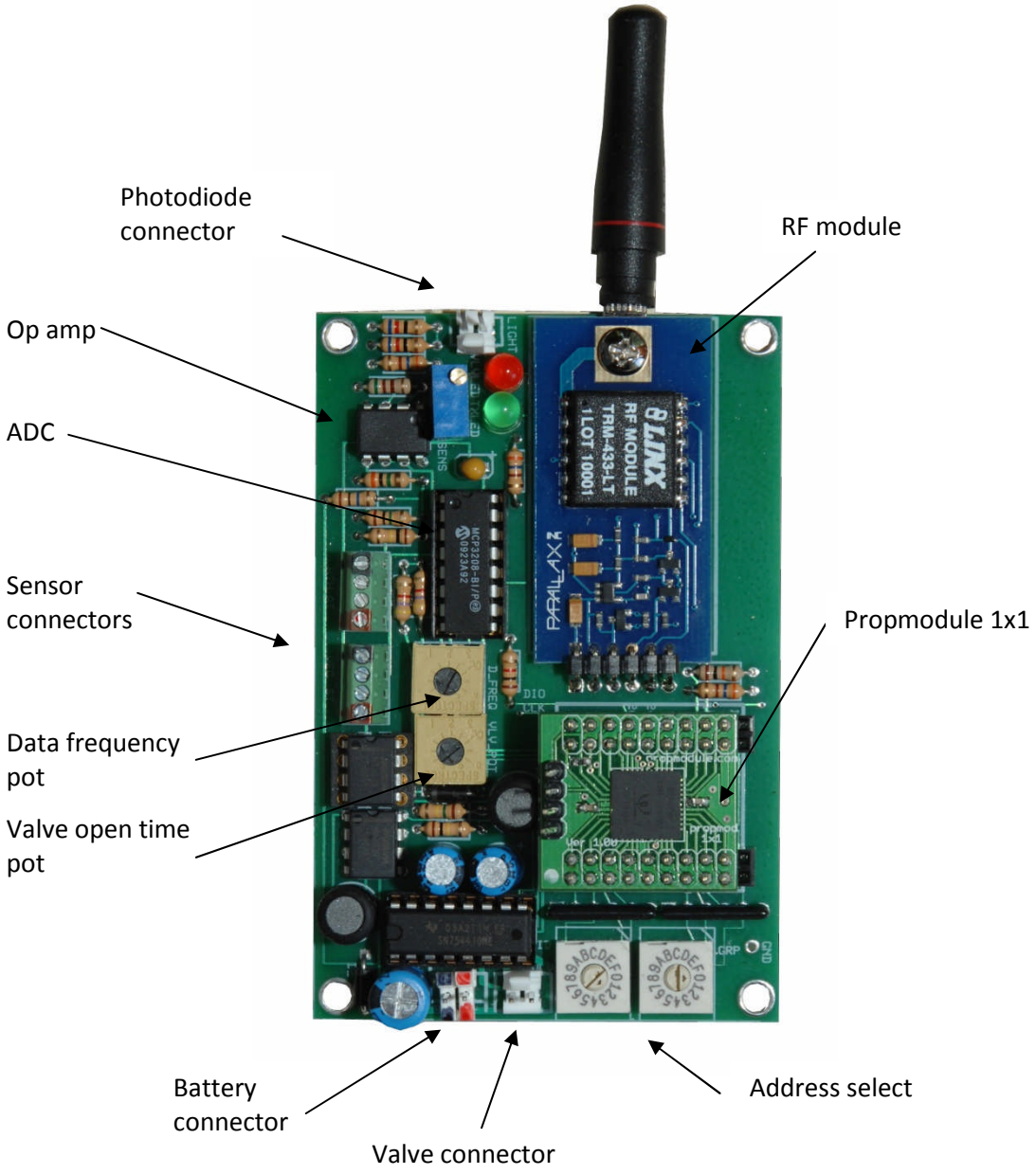

2 Vineyard Monitor PCB

A SN754410 half bridge driver is used send a pulse to an optional irrigation control valve. These valves are commonly used in irrigation systems and use a pulsed DC signal (100 – 200mS) to drive a latching

type solenoid. The advantage of the latching solenoid valve is that is does not consume any power except when it is actually switched. The SN754410 driver is used to reverse polarity to the valve to open and close it. The LED is lit when the valve is set to the OPEN position.

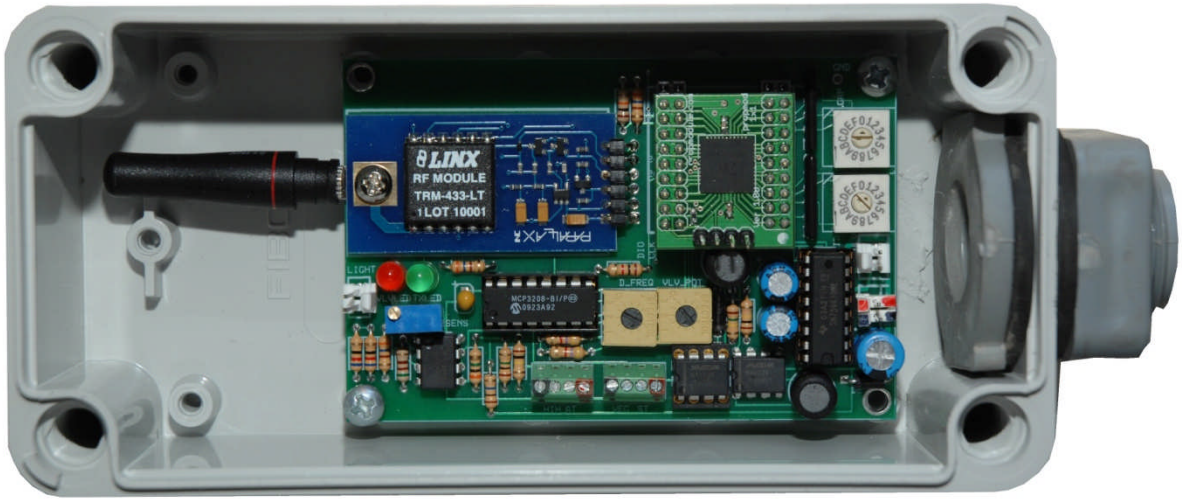

3 **PCB in waterproof housing**

Sensors

Dallas DS18B20Z chips are used for temperature monitoring. These have the advantage of not requiring calibration and provide 0.5 ^{o}C accuracy. They are interfaced directly to pins on the propeller. Code for reading the one-wire bus was obtained from the propeller exchange. One DS18B20Z is housed halfway up the support pole to sense air temperature while the second one is located in the tip to sense soil temperature.

Air moisture is determined using a Honeywell HIH-4031 humidity sensor. This provides a voltage proportional to ambient humidity that is read by the MCP3208 ADC. The humidity sensor is located halfway up the support pole. Small holes are drilled in the pole at this point to enable air exchange.

Soil moisture is determined using a specialized sensor manufactured by Vegetronix. The VG400 probe provides a linear voltage signal proportional to soil moisture. This signal is interfaced to the MCP3208 ADC.

Solar radiance is measured by a BPW34 silicon photodiode. This is s good detector of sunlight because its range of spectral sensitivity is 400nm to 1100nm (solar spectrum is 300nm to 1800nm). The photodiode functions as a miniature solar cell producing 2.64mA when radiant intensity is 1000 W/m^2. A set of resistors and a non-inverting opamp is used to boost the voltage to the range of the MCP3208 ADC. Solar irradiance $I = 303.7 \times V$ where V is the amplified voltage. A pot is used to calibrate the sensor. The maximum solar intensity corresponding to 5 volts is 1520 W/m^2.

Battery voltage is monitored using the second op amp channel and the MCP3208 ADC.

Real Time

To keep the device simple, it was decided to eliminate the need for a real-time clock. Data is time stamped when received by the host PC. Day rollover is estimated by the solar irradiance sensor. An increase in light above the “night” threshold indicates that a new day has dawned. At the start of the new day the system checks if soil moisture is low and switches on the irrigation valve for the preset time if needed.

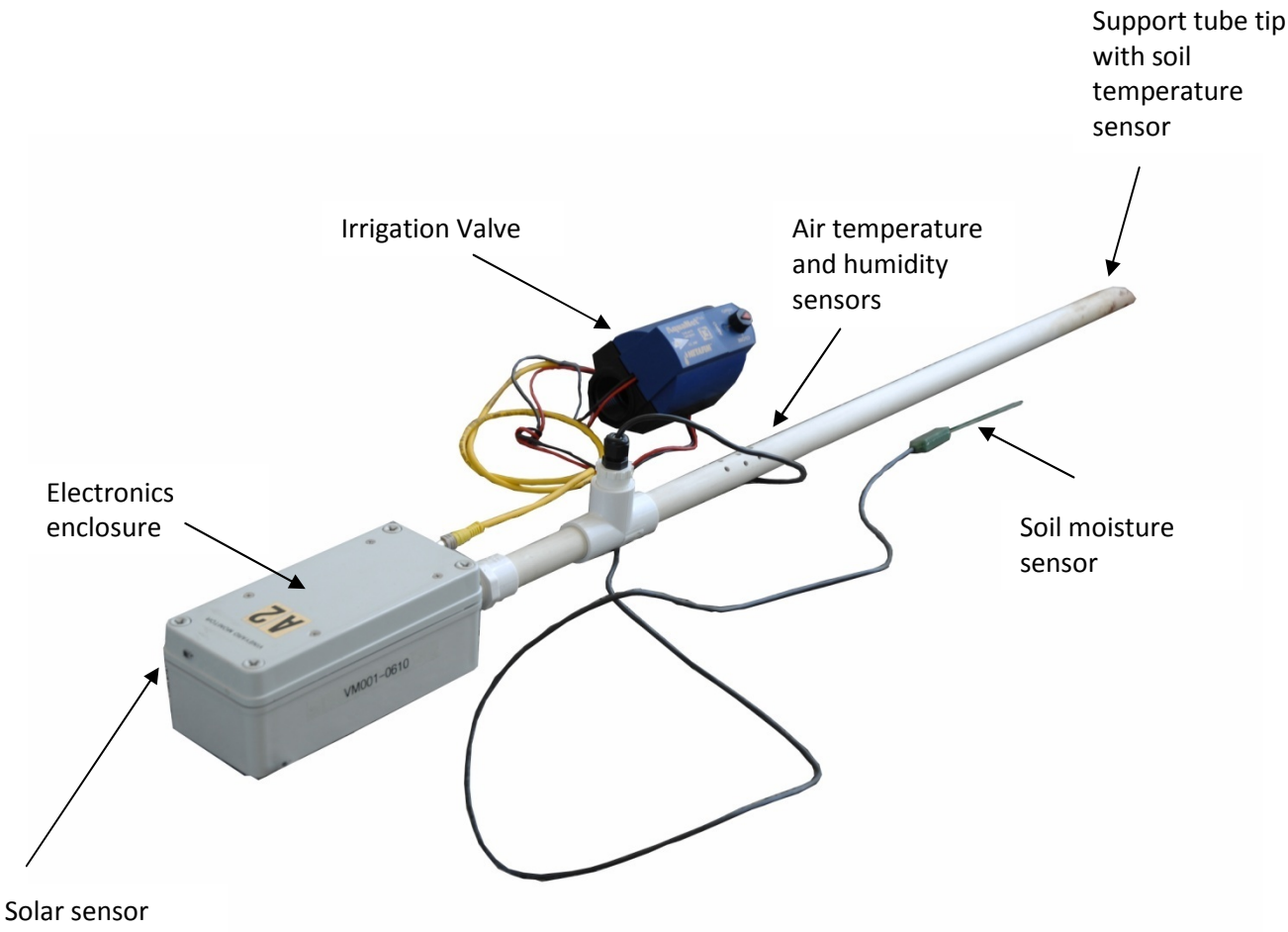

Block Diagram – HOST PC

To keep the *Vineyard Monitor* simple, and to ensure reliable communications, the host PC is responsible for time stamping data and ensuring that each enabled Vineyard Monitor is functioning correctly. The Vineyard monitors have no real time clock, nor do they receive any data. They are simply broadcast only. The host PC is receive only. The receiver circuit was made by simply modifying a Parallax Propstick USB so that it could be powered directly from the host PC USB port. Ports on the PropStick were interfaced to a Parallax RF433 transceiver module and a LED signals incoming data.

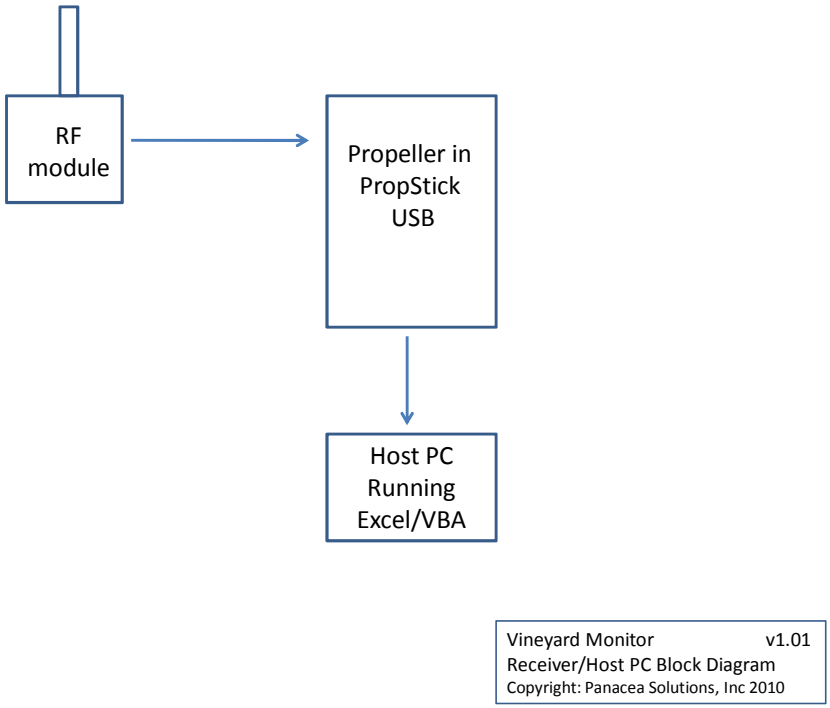

The *Vineyard Monitor* transmits a 15 byte message + 4 byte CRC. The message format is:

Byte 1	ID	1 to 255
Byte2	sequence number	0 to 15 – this just cycles around to flag new messages
Byte3	soil moisture	
Byte4	soil temperature	
Byte5	air humidity	
Byte6	air temperature	
Byte7	solar irradiance	low byte
Byte8	solar irradiance	high byte
Byte9	battery voltage	
Byte10	day flag	0=night 1=day
Byte11	valve flag	0=off 1=on
Byte12	unused	future use
Byte13	unused	future use
Byte14	unused	future use
Byte15	unused	future use

The code in the receiver PropStick decodes the message received by the RF433 and checks the CRC. The message is then sent over the USB interface to the host PC. Any program capable of receiving serial data over USB can be used to log and analyze the data. Using a PC host allows data to be recorded for long periods of time and graphical analysis can be done easily. Complex calculations can be used to predict dew point, frost damage and other parameters.

In this application the host program was executed using Microsoft Excel and VBA. Using Excel provides an easy way to display, calculate, and record data. A spreadsheet can be set up for each *Vineyard Monitor* and other spreadsheets in the workbook can provide summary data. It is easy in Excel to chart data and also to sort and filter information. VBA was used within Excel to acquire the serial transmission using MSComm. Excel functions are used to time stamp the incoming data and to monitor timeouts. Each monitor can be enabled or disabled from Excel using onscreen controls. Excel routines for displaying local sunset and sunrise times where obtained from the NOAA website. Total irradiance per day is calculated by integrating solar data received from each *Vineyard Monitor*.

The range of information that can be provided using a simple user-friendly interface such as Excel is truly limitless and it can be easily customized. A sample Excel screenshots are shown below:

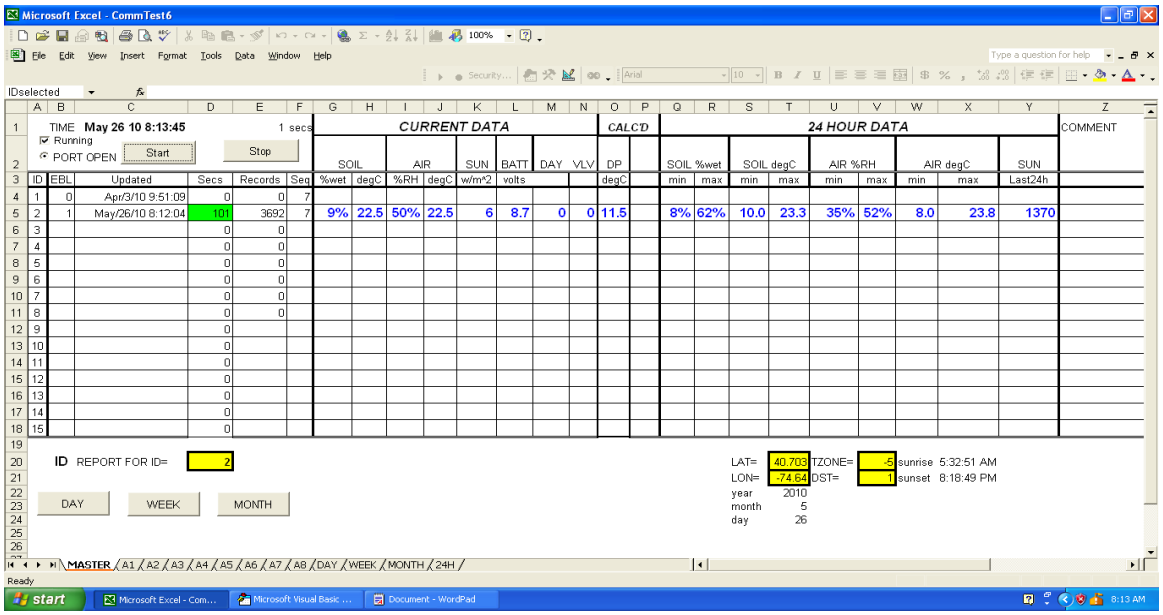

4 The inventor in the vineyard

Schematics

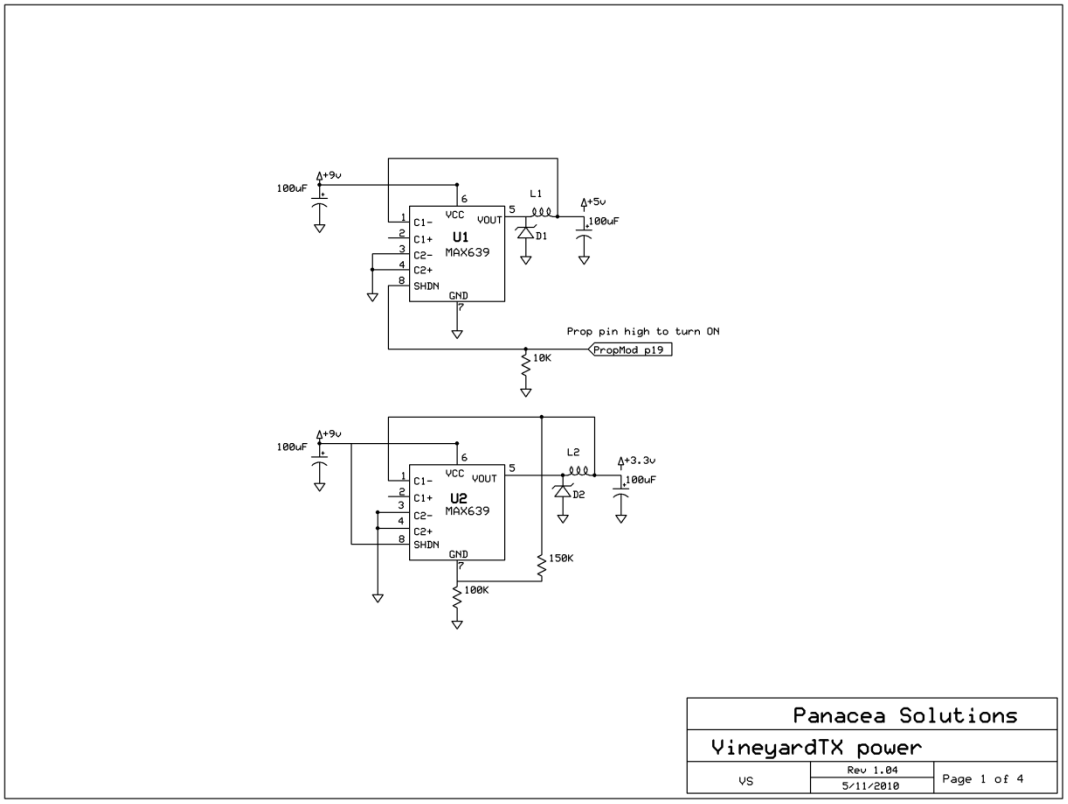
100uF
+9v
VCC
VOUT
C1-
C1+
C2-
C2+
SHDN
GND
U1
MAX639
L1
D1
+5v
100uF
Prop pin high to turn ON
PropMod p19
10K
U2
MAX639
L2
D2
+3.3v
150K
100K
Panacea Solutions
VineyardTX power
VS
Rev 1.04
5/11/2010
Page 1 of 4

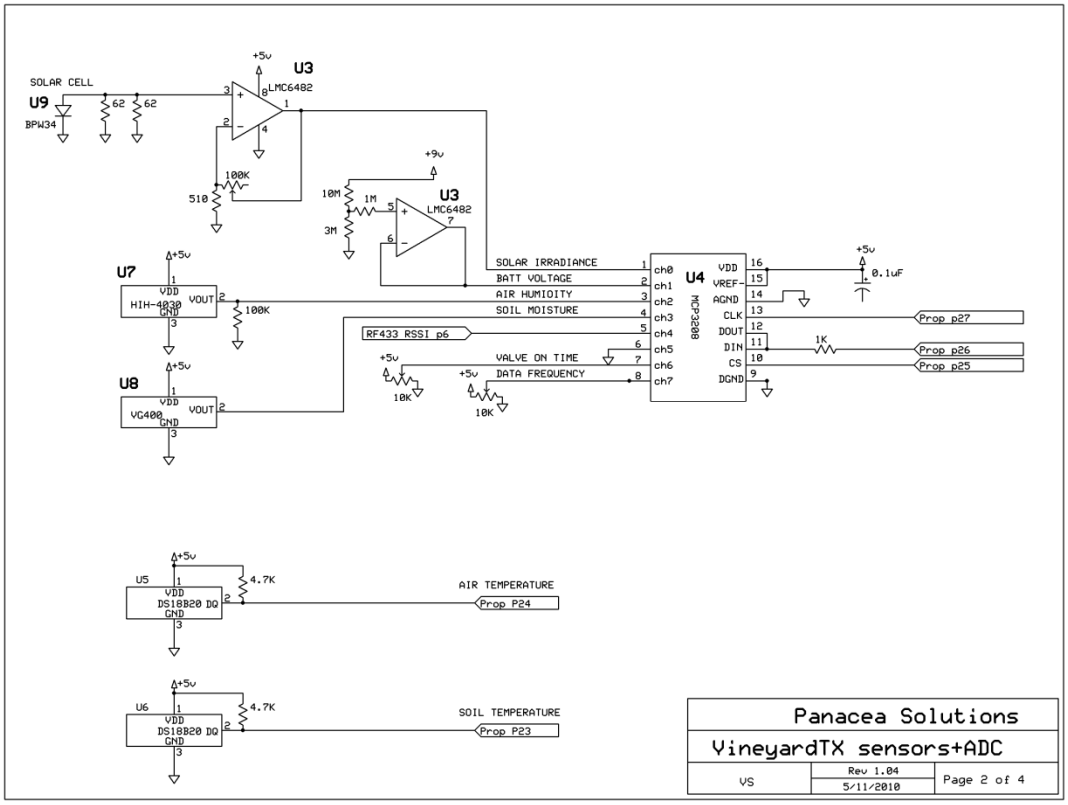
SOLAR CELL
U9
BPW34
62
62
U3
LMC6482
+5v
100K
510
+9v
10M
1M
3M
U7
HIH-4030
VDD
VOUT
GND
100K
U8
VG400
SOLAR IRRADIANCE
BATT VOLTAGE
AIR HUMIDITY
SOIL MOISTURE
RF433 RSSI p6
VALVE ON TIME
DATA FREQUENCY
10K
U4
MCP3208
ch0
ch1
ch2
ch3
ch4
ch5
ch6
ch7
VDD
VREF
AGND
CLK
DOUT
DIN
CS
DGND
0.1uF
1K
Prop p27
Prop p26
Prop p25
U5
DS18B20
DQ
4.7K
AIR TEMPERATURE
Prop P24
U6
SOIL TEMPERATURE
Prop P23
Panacea Solutions
VineyardTX sensors+ADC
VS
Rev 1.04
5/11/2010
Page 2 of 4

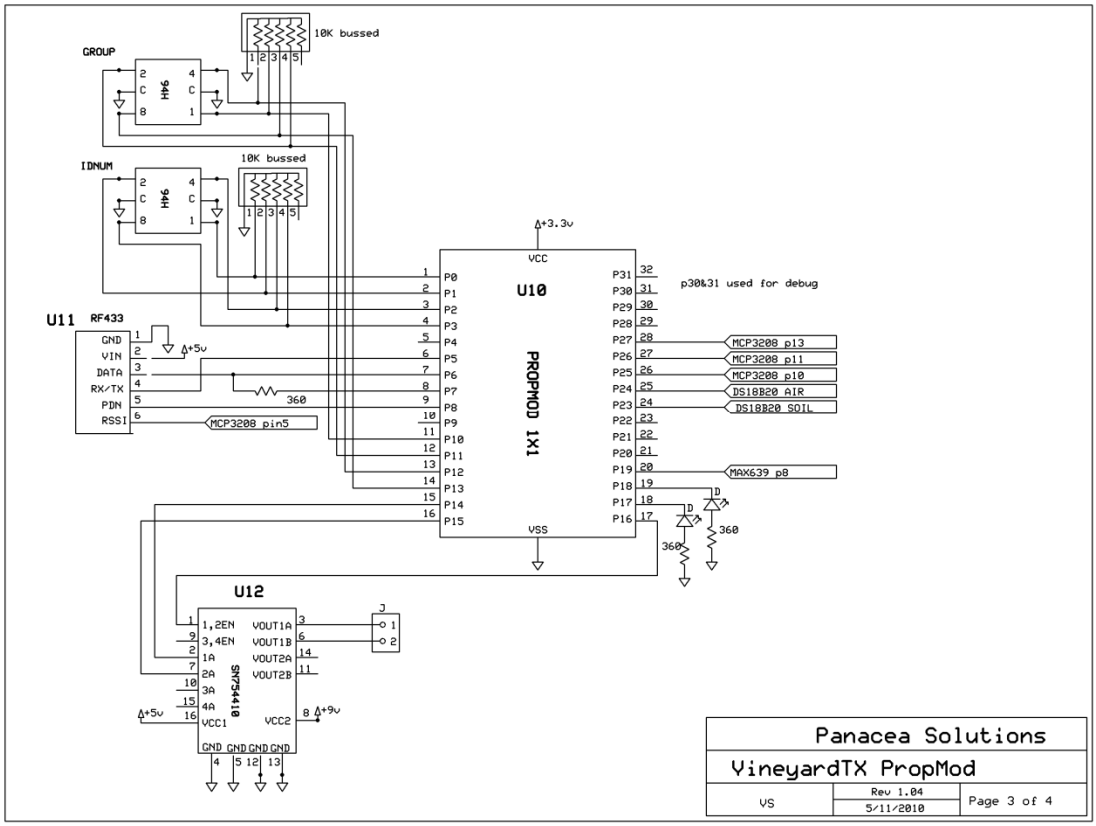
GROUP
IDNUM
10K bussed
10K bussed
U11
RF433
GND
VIN
DATA
RX/TX
PDN
RSSI
+5v
360
MCP3208 pin5
+3.3v
VCC
U10
PROPMOD 1X1
VSS
p30&31 used for debug
MCP3208 p13
MCP3208 p11
MCP3208 p10
DS18B20 AIR
DS18B20 SOIL
MAX639 p8
U12
SN754410
1,2EN
3,4EN
VOUT1A
VOUT1B
VOUT2A
VOUT2B
VCC1
VCC2
+9v
GND GND GND GND
Panacea Solutions
YineyardTX PropMod
VS
Rev 1.04
5/11/2010
Page 3 of 4

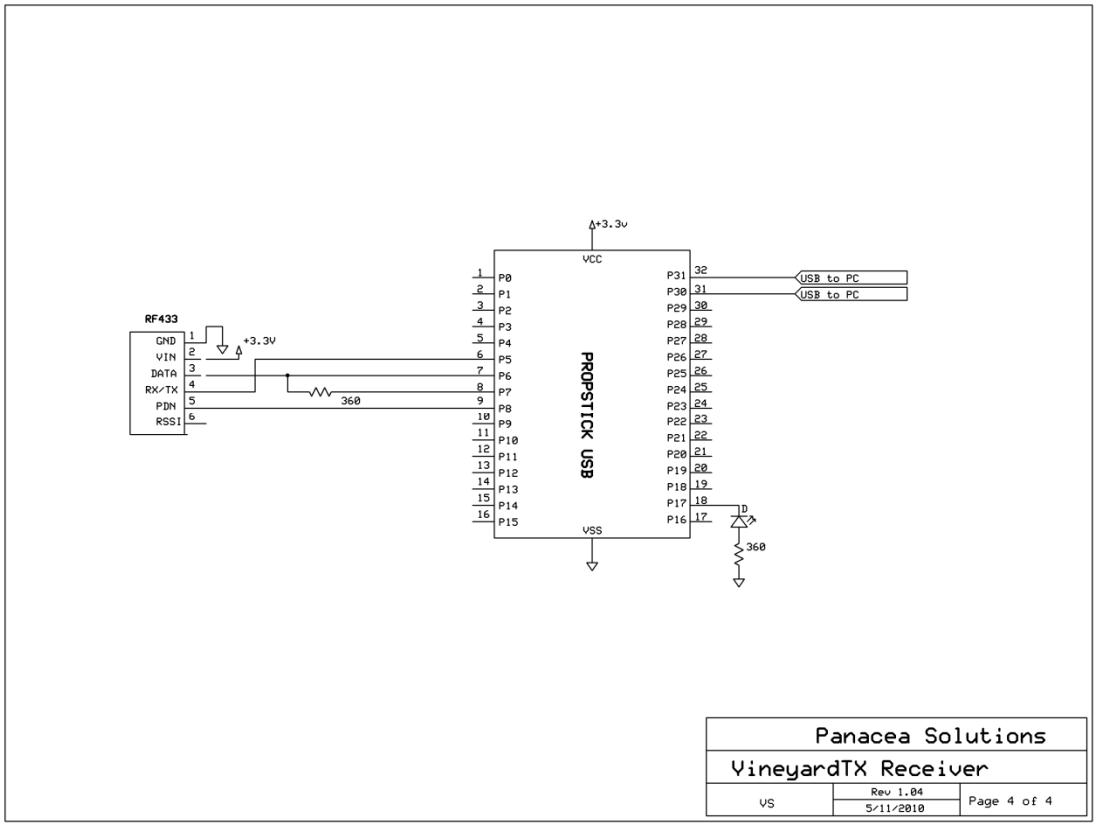
RF433
GND
VIN
DATA
RX/TX
PDN
RSSI
+3.3V
360
+3.3v
VCC
PROPSTICK USB
VSS
USB to PC
USB to PC
Panacea Solutions
YineyardTX Receiver
VS
Rev 1.04
5/11/2010
Page 4 of 4

Circuit boards

Vineyard Monitor circuit board

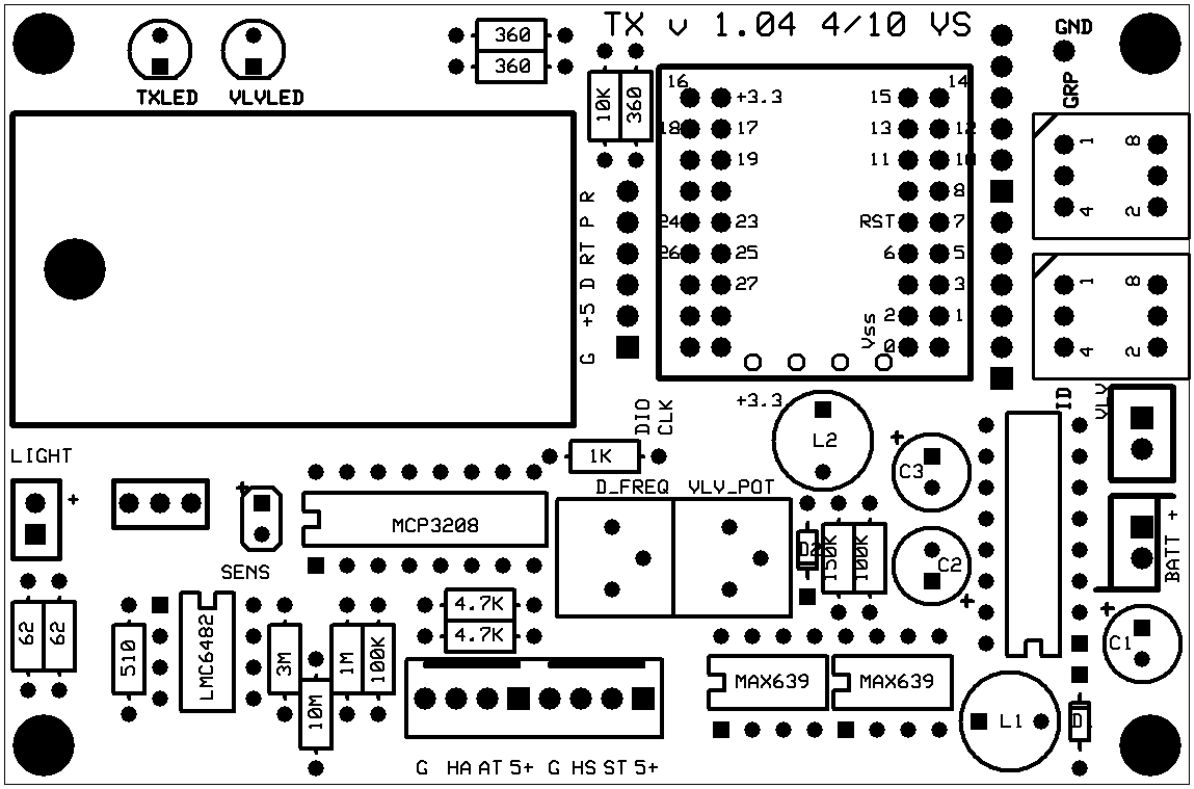

Sensor circuit board

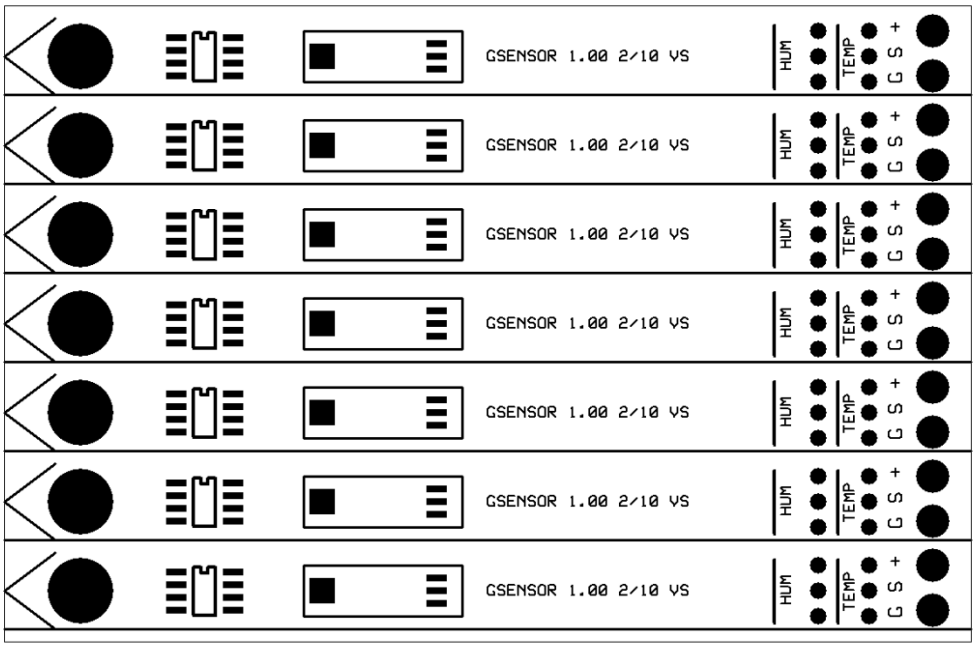

Receiver circuit board

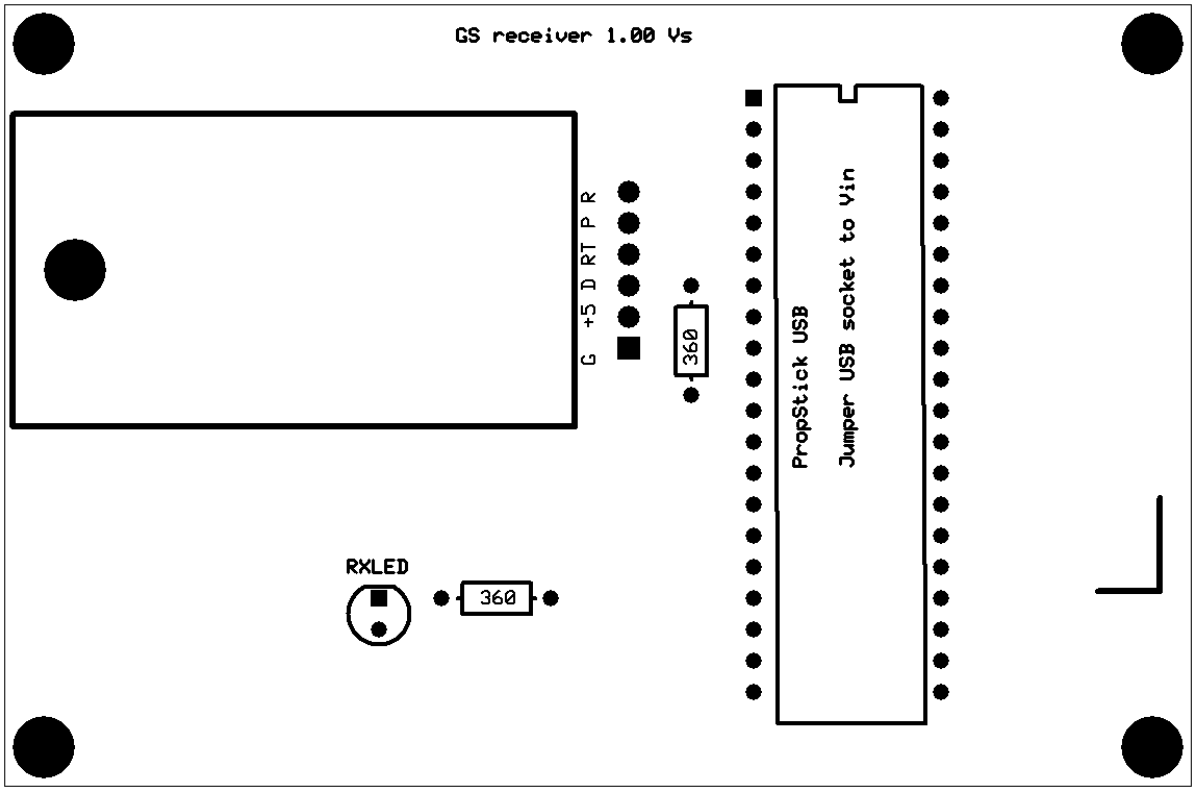

Bill of Materials

Vineyard Monitor	BOM			updated
ITEM	**TAG**	**QTY**	**PART#**	**VENDOR**
Hex rotary switch		2	GH7255	Digikey
OP Amp	U3	1	LMC6482IN	Digikey
Propeller module	U10	1	PROPMOD1x1	propmodule.com
10K resistor bussed		2	770-61-R10KP	Digikey
H-driver	SN754410	1	296-9911-5	Digikey
ADC	U4	1	MCP3208-BI/P	Digikey
RF transceiver	RF433	1	27982	Parallax
100K pot	Light adjust	1		
LED green	5V pwr	1		
LED red	TX	1		
LED yellow	VlvON	1		
Connector2pin	pwr + vlv + light	3		
Plug2pin		3		
0.1uF		1		
100uF		3		
Connector4pin	sensors	2		
Plug4pin	sensors	2		
Voltage regs	U1,U2	2	MAX639CPA+	Digikey
Zener	1N5817	2	1N5817FSCT	Digikey
Inductor	M9993	2	M9993	Digikey
10K pot		2		Digikey
Battery holder	3xAA	2		Digikey
R1K		1		Digikey
R360		1		Digikey
R10M		1		Digikey
R3M		1		Digikey
R510		1		Digikey
R360		4		Digikey
R62		2		Digikey
R4.7K		1		Digikey
R10K		1		Digikey
R100K		1		Digikey
PCBS				
PCB -TX		1	TX 1.04	ExpressPCB
PCB - sensor		1	GSENSOR 1.00	ExpressPCB
SENSORS				

Temperature sensor	U5,U6	2	DS18B20Z+	Digikey/Newark
Humidity sensor	U7	1	480-3169	Digikey
Soil Moisture	U8	1	VG400	Vegetronix
Light sensor	U9	1	751-1015	Digikey

MONITOR HOUSING

Enclosure waterproof	Fibox ABS D65 G 8784307	1	7301K13	McMaster Carr
PVC pipe 3/4inch		30inch		
PVC Tee		1		
PVC pipe 3/4inch		6 inch		
PVC strain relief		1		
PVC bulkhead fitting		1		

Source Code

See attached ZIP file for all user source code. Other modules are unmodified from Propeller exchange.

Transmitter SPIN source files:

Transceiver TX17

Irrivalve

Receiver SPIN source files:

Transceiver RX07